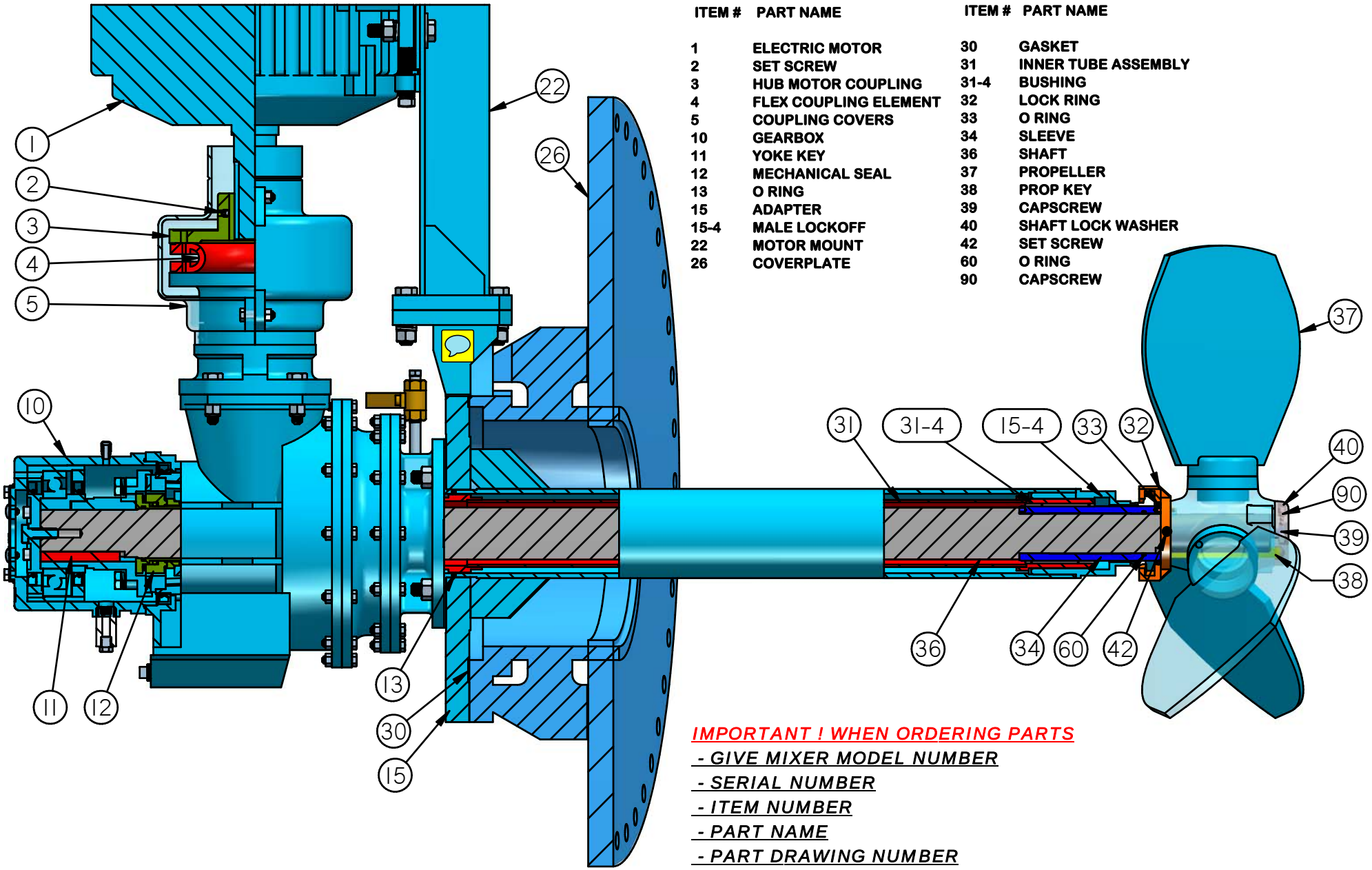

ITEM #	PART NAME	ITEM #	PART NAME
1	ELECTRIC MOTOR	30	GASKET
2	SET SCREW	31	INNER TUBE ASSEMBLY
3	HUB MOTOR COUPLING	31-4	BUSHING
4	FLEX COUPLING ELEMENT	32	LOCK RING
5	COUPLING COVERS	33	O RING
10	GEARBOX	34	SLEEVE
11	YOKE KEY	36	SHAFT
12	MECHANICAL SEAL	37	PROPELLER
13	O RING	38	PROP KEY
15	ADAPTER	39	CAPSCREW
15-4	MALE LOCKOFF	40	SHAFT LOCK WASHER
22	MOTOR MOUNT	42	SET SCREW
26	COVERPLATE	60	O RING
		90	CAPSCREW

IMPORTANT ! WHEN ORDERING PARTS

- GIVE MIXER MODEL NUMBER

- SERIAL NUMBER

- ITEM NUMBER

- PART NAME

- PART DRAWING NUMBER

COPYRIGHT © 2010, JENSEN MIXERS INTERNATIONAL, INC.

Jensen MIXERS

SERIES 600 FA MIXER PARTS DRAWING	08/02/2010
	S12E-5